TI3203en	Technical Information	thermokon asia pacific
PDE1- Series (dP)	Air Differential Pressure Sensor with Active Output	

The PDE1- Series (dP) is designed to measure differential pressure in Duct Systems or rooms, especially where high precision measurements are needed

The sensor can be use in non aggressive, non flammable environments

Four Selectable Measuring Ranges

The sensor operates with low power supply.

The sensor output is 0..10V or 4…20mA, field selectable

Use

Compatible to all common HVAC DDC and Analog Controls systems, with/without Building Automation System

Differential pressure measurement in precise HVAC control systems

Monitoring differential pressure of fans in air systems

Suitable for laboratory and clean room applications with high precession controls

Features

Sensor outputs 0…10V or 4…20mA, field selectable

dP- Sensor with excellent repeatability, practically no drift or offset

dP Sensor is factory calibrated and temperature compensated

Response Time Filter

Professional and practical product design, withstands rough environmental conditions

Easy to use, install and maintain

Product Range

Order Codes	Power Supply	Outputs	Measuring Range	Over Pressure Rating	Burst Pressure Rating	IP Rating
PDE1.CE	AC/DC 24V (±10%)	0…10V or 4…20mA	0…50Pa 0…100Pa 0…250Pa 0…500Pa	1 bar - 100.000 Pa	3 bar - 300.000 Pa	IP65
PDE1.DE			0…750Pa 0…1000Pa 0…1250Pa 0…1500Pa			

Sensor Specification	Sensor Specification	Measured	Air Differential Pressure
		Sensor Characteristics	Active
		Sensor Output	0…10V or 4…20mA
		Total Accuracy	see accurracy curve page 3
		Zero Point Accurracy	0.2 Pa
		Zero Point Repetability	0.1 Pa
		Over Pressure	1 bar, 100.000 Pa
		Burst Pressure	2 bar, 100.000 Pa
		Offset stability	<0.03 Pa / year
		Calibrated Temperature Range	-40…85ºC
		Response Time Filter	4sec. ; 10 sec.
		Measuring Range	see page 1
		Media Compatitbility	Air, N2, O2, non condensing
Technical Information	Electrical Information	Power Supply	DC 15...24V (±10%) or AC 24V (±10%)
		Frequency	50 / 60 Hz @ AC 24V
		Output Load	Min. load 10kΩ
		Power Consumption	Typical 1.1W at 24V= , 1.7VA at 24V~
	Mechanical Information	Terminal Clamp	Screw terminal, max. 1.5mm²
		Connection Nozzle Dimension	Ø6.3 x 1.15mm, L=10mm
		Cable Entry	M20, Ø6...Ø8mm cables
		Sensing Element Position	Internal
	Color and Material	Housing Cover	PA6, White
		Housing Bottom	PA6, White
		Lock Screws	Snap Connector
		Cable Gland	ABS, RAL 7042 (Traffic Grey A)
		Gland Rubber Seal	ENSOFT50, RAL 9016 (Traffic White)
		User element	DIP Switches
		Connection Nozzle	PA6, White
	Environmental Condition	Operation Temperature	-10ºC...+50ºC
		Operation Humidity	<85% r.h., no condensation
		Transport Temperature	-35ºC...+70ºC
		Transport Humidity	< 90% r.h.
		Storage Temperature	-20ºC...+70ºC
		Storage Humidity	< 85% r.h., no condensation
	Norms and Directives	IP- Rating	IP65 according to IEC60529
		Safety Class	III to EN 60 730
		Product Standard 1	Automatic Electric. Controls for household and similar use
		Product Standard 2	2009/EN 60 730-1
		CE Conformities	2004/108/EG Electromagnetic Compatibility EMV
		RoHS Compatibility	RoHS 3, Directive 2015/863
		Emitted Interference	2000/EN60730-1 Emitted Interference
		Interference Resistance	2000/EN60730-1 Interference Resistance
		Transport to Climatic Condition	IEC 60721-3-2
		Transport Mechanical Condition	IEC 60721-3-2 to class 2M2
		Storage Climatic Condition	IEC 60721-3-1
		Storage Mechanical Condition	IEC 60721-3-1 to class 2M2
Miscellaneous	Accessories	Mounting Kit, Included in delivery	2 plastic duct connectors; 2m Silicone tube
	Shipping & Handling	Packaging Material	Rigid Cardboards Packaging
	Order Notes	Order Code	PDE1.DE

Advices

Installation Notes

Caution

Observe the following general regulation for engineering and implementation:

- All relevant national and heavy power regulation
- Other country specific regulations
- Country-specific regulations
- Local electrical supply authority regulation
- Schematics, cable listings, dispositions, specification and arrangements from the customer or engineering office in charge
- Third party specifications, e.g. general contractors or constructors

Mounting Advices

Caution

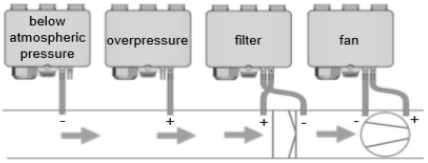

Disposal Notes

The device is considered an electronic device for disposal in terms of the EUROPEAN DIRECTIVE 2012/19/EU.

The device may not be disposed as domestic garbage.

The device must be disposed through channels provided for this purpose.

It is mandatory to comply with local currently applying laws and regulations.

Accuracy Curves

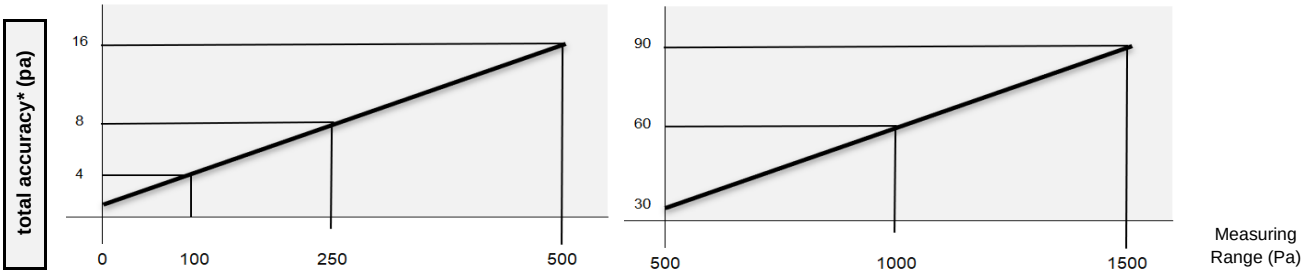

* total accuracy =sum of zero-point accurracy, span accuracy and repeatability

Dimensional Drawing

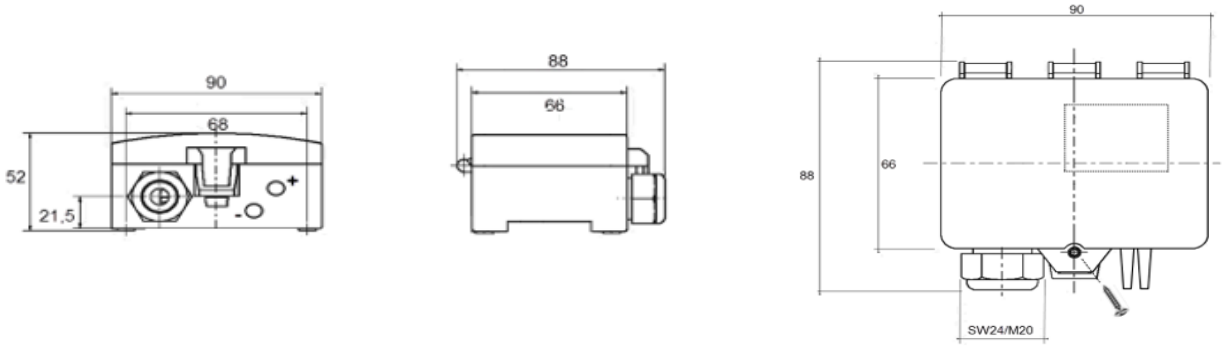

V19.1

Connections & Settings

Terminals
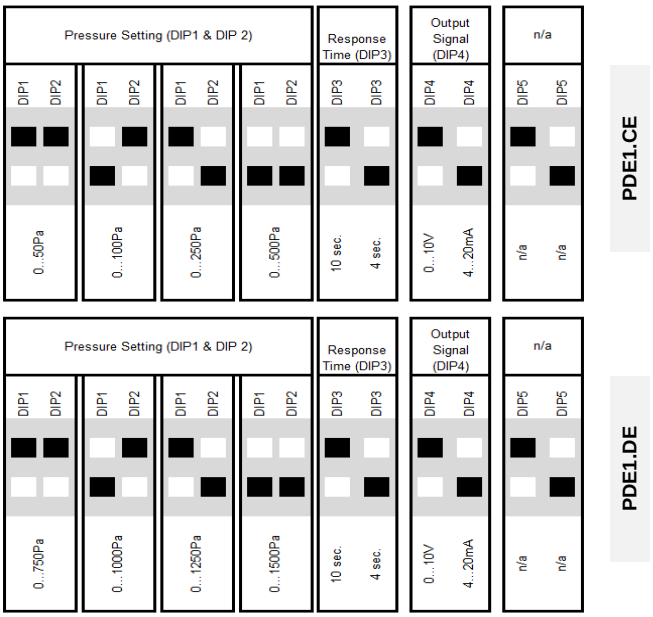
T1	UB+ (24V AC/DC)
T2	GND
T3	Air Pressure
T4	n/a
T5	n/a